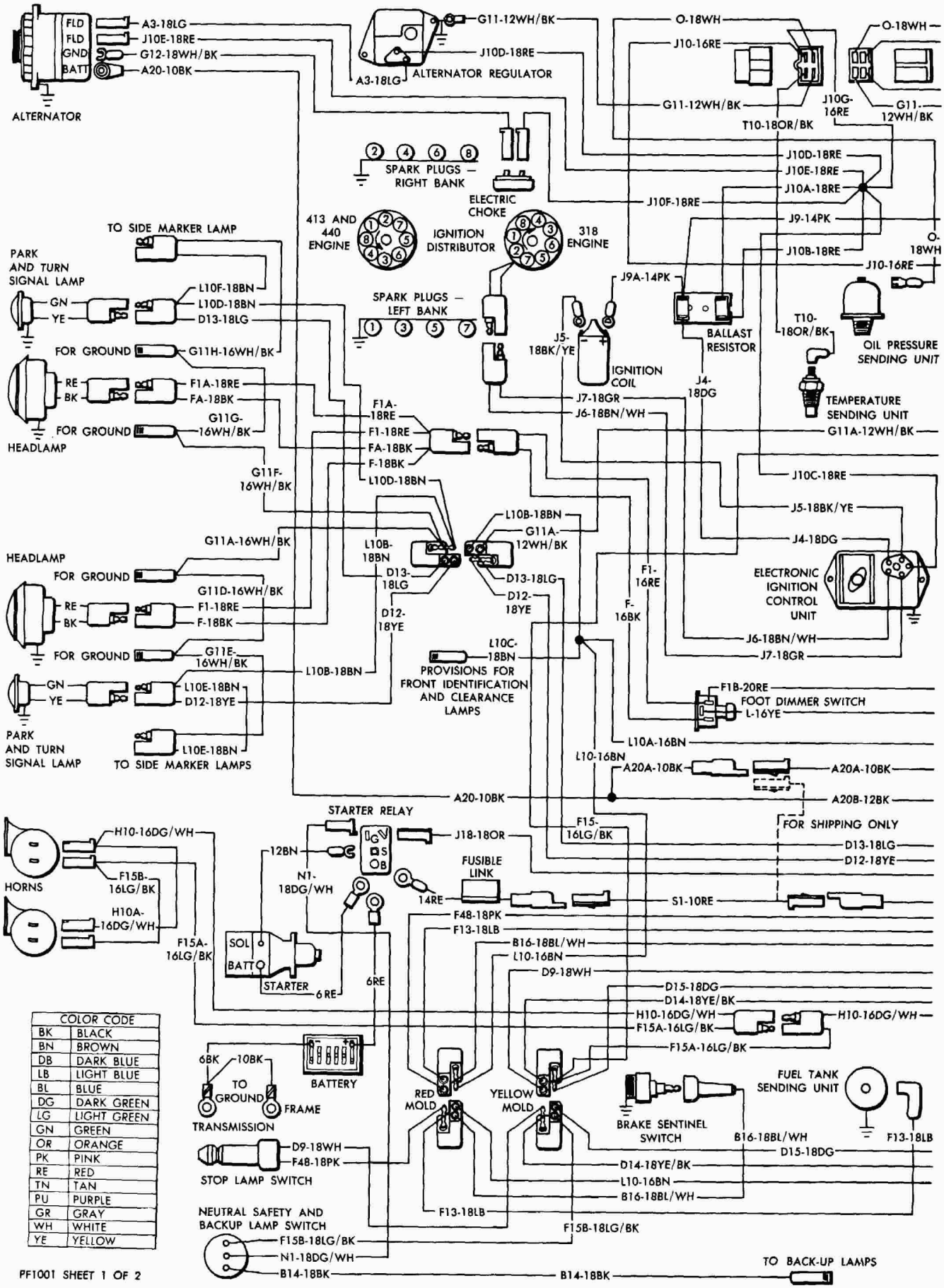

PF1001 SHEET 1 OF 2

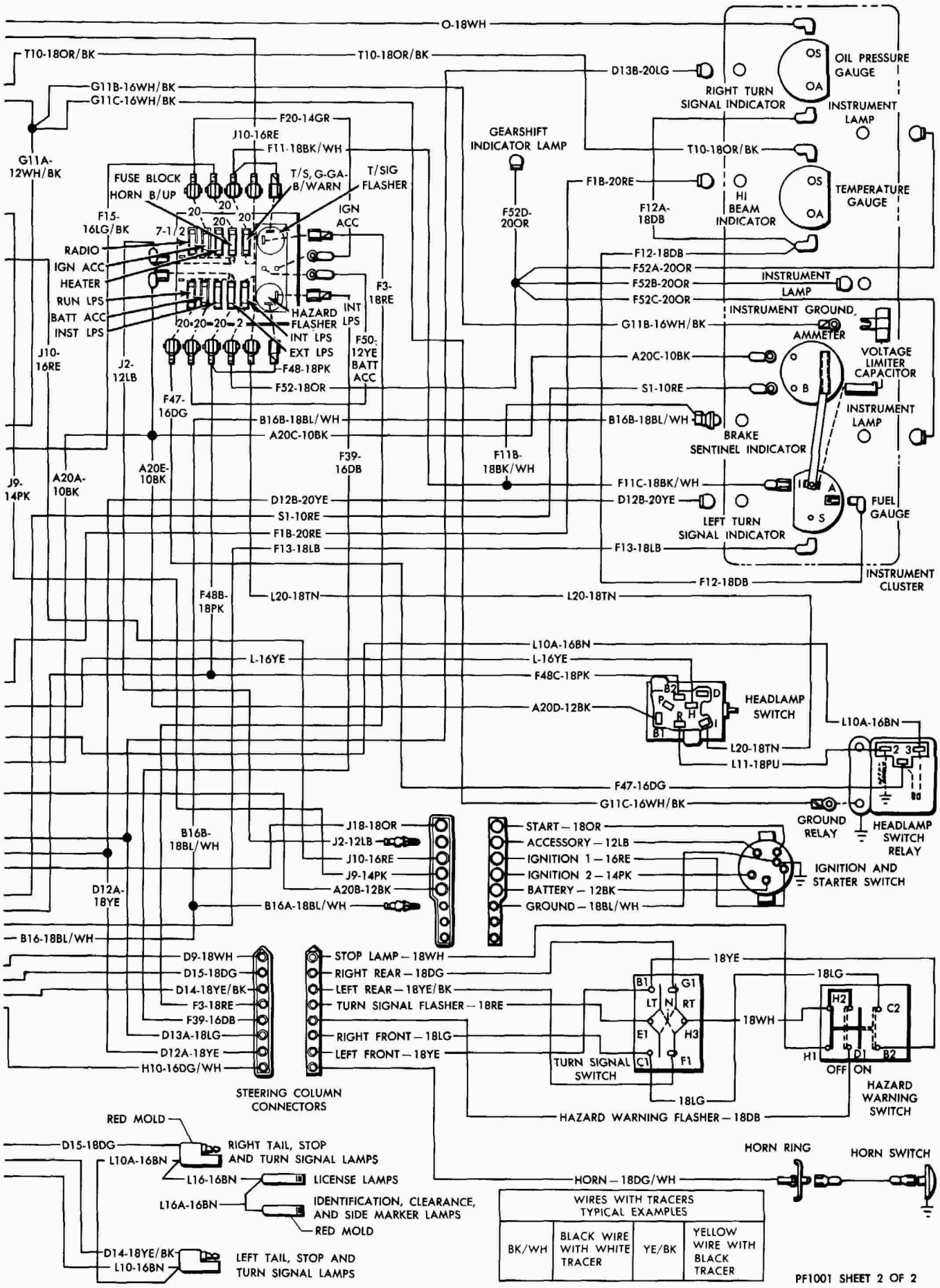

Fig. 5—Chassis Complete 1973